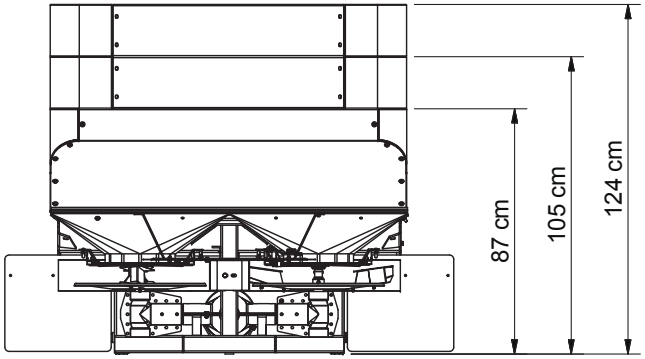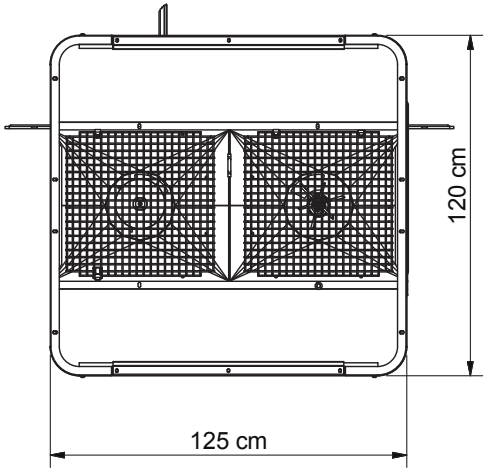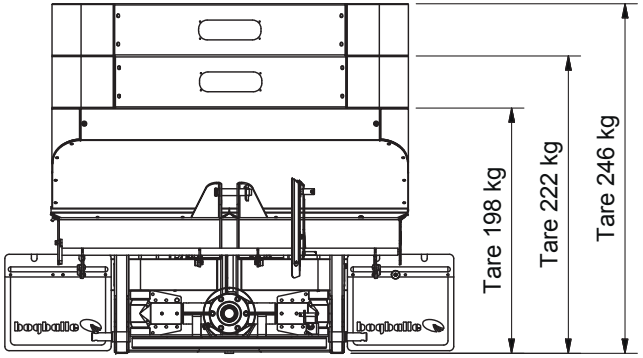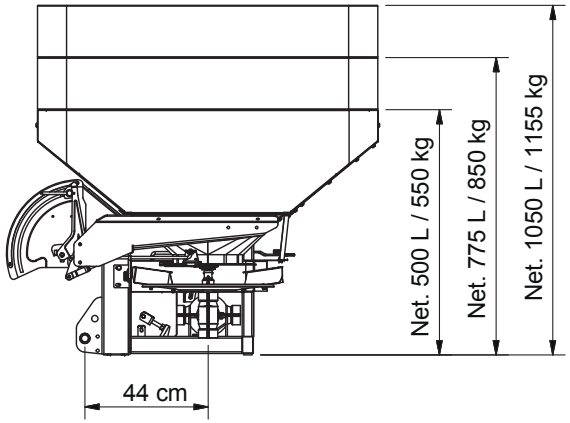L1 base 10-18 M